JoISE 2 (1) (2025): 1 - 10

Journal of Integrated Science Education

http:// https://e-journal.umc.ac.id/index.php/JoI

ARDUINO-BASED AUTOMATIC WASTE SORTING SYSTEM: A SCHOOL-BASED WASTE MANAGEMENT INNOVATION TO SUPPORT SCIENCE LEARNING AT SMPN 1 PLUMBON

Ruslani[1]
[1] Teacher at Sekolah Menengah Pertama Negeri 1 Plumbon, Cirebon, Jawa Barat, Indonesia
[1] Student at Graduate School of Multidisciplinary Technology, Institut Teknologi Bandung (ITB), Bandung 40132, Indonesia
email: ruslani.crb@gmail.com

DOI: https://doi.org/10.32534/

Accepted:26/12/2025 Approved: 30/12/2025 Published: 31/12/2025

Abstract

Waste sorting remains a persistent challenge in school environments due to the predominance of manual practices and inconsistent behavioral compliance, while the integration of simple and affordable technological solutions that simultaneously support learning objectives remains limited. This study aims to develop and evaluate an automated waste sorting system based on an Arduino microcontroller that integrates a color sensor (TCS3200) and a gas sensor (MQ-135), and to assess its performance and educational relevance within a school context. An experimental engineering research design was employed to design, assemble, and test a multi-sensor waste sorting prototype capable of classifying waste into organic and inorganic categories using combined visual and chemical indicators. A total of 40 waste samples, consisting of 20 organic and 20 inorganic items, were tested under controlled environmental conditions following sensor calibration to determine optimal threshold values. System performance was evaluated based on classification accuracy, reliability, and misclassification analysis. The results indicate that the integrated multi-sensor system achieved an overall classification accuracy of 92.5%, outperforming single-sensor approaches based solely on color or gas detection, and significantly reducing misclassification rates for visually ambiguous waste items. Reliability testing further demonstrated consistent classification outcomes across repeated trials. The novelty of this study lies in the integration of low-cost multi-sensor technology within an educationally oriented waste management system, positioning the developed device not only as a functional sorting tool but also as a STEM-based learning medium that supports contextual and project-based learning. These findings suggest that simple multi-sensor systems can effectively enhance waste sorting accuracy while contributing to sustainable environmental education in school settings.

Keyword: *waste sorting; Arduino; multi-sensor system; TCS3200; MQ-135; STEM education*

INTRODUCTION

Waste is one of the most significant environmental issues in schools, particularly in educational institutions with large student populations and intensive learning activities. Canteen activities, the use of stationery and learning media, and daily consumption generate significant amounts of various types of waste. Although some schools have provided separate waste bins, sorting practices are often ineffective because they depend on individual habits and discipline. Research by Endartiwi et al. (2024) shows that physical facilities are not always followed by

changes in student behavior in waste sorting, making technology-based interventions an opportunity to reduce the burden of manual sorting.

Socialization-based environmental education programs have been shown to increase knowledge about waste types, but their impact on sorting practices is often not sustainable. Yusra et al. (2023) found that despite increased understanding, students tended to re-mix waste after the socialization period ended. This indicates a gap between knowledge and practice. Innovation in automatic waste sorting devices can reduce the burden on individual behavior and simultaneously serve as a medium for STEM education, enabling learning to be more than just theory-oriented and foster real-world research experiences.

On the other hand, the development of microcontroller and sensor technology provides the opportunity to design a low-cost automatic waste sorting system. This system can operate on the principle of identifying the physical and chemical characteristics of waste. The TCS3200 color sensor is capable of reading the color intensity of an object's surface, so it can be used to identify types of waste that generally have different color characteristics. Putra (2020) showed that the TCS3200 can be applied for color-based material sorting with fairly good accuracy under controlled lighting conditions. Meanwhile, the MQ-135 gas sensor can detect volatile gases produced from organic materials, such as CO_2 and NH_3 due to the degradation process. According to Rahmadani (2021), the MQ-135 has high sensitivity to organic gases, so it can be used as an additional parameter to differentiate organic and inorganic materials.

The gap between the two studies gave rise to the idea of combining color sensors and gas sensors to differentiate between organic and inorganic waste. The integration of these two sensors offers a multi-parameter approach to waste sorting. Lestari (2022) found that using a single sensor often resulted in misclassification, especially for objects with similar color characteristics, such as dark plastic and dry leaves. By combining visual data via a color sensor and chemical data via a gas sensor, the sorting system has a higher chance of accuracy. This innovation not only provides a technical solution to the waste sorting problem but also provides students with a research-based learning experience. Sari and Widodo (2021) emphasized that a STEM approach through environmental technology projects can increase student engagement and understanding of science, technology, engineering, and mathematics concepts in an integrated manner.

Based on the above description, the research questions are as follows:

1. How to design an Arduino-based automatic waste sorting device with integrated color and gas sensors, and

2. How accurate is the automatic sorting system compared to manual sorting by students?

The objectives of this research are:

(1) to develop an Arduino-based automatic waste sorting prototype with TCS3200 and MQ-135 sensors, and

(2) to analyze the performance and accuracy of organic and inorganic waste sorting.

This research contributes to waste management efforts in schools while strengthening STEM learning through Research-Based Learning. The research results are expected to form the basis for developing a sorting system with an intelligent classification approach, supporting environmentally conscious school programs such as Adiwiyata.

METHODE

This study employed an experimental engineering research design aimed at developing, implementing, and evaluating an automated waste sorting system based on an Arduino microcontroller integrated with a color sensor (TCS3200) and a gas sensor (MQ-135). The research

© 2024, Journal of Science Education
ISSN 3031-4518 (online)

focused on both technological performance and contextual applicability within a school-based environment, emphasizing accuracy, reliability, and feasibility for educational use.

Unlike conventional environmental education studies that primarily emphasize behavioral interventions, this research adopted a technology-assisted problem-solving approach, positioning the developed system as both an operational waste management tool and a STEM-based learning medium. The experimental design allowed systematic observation of system behavior under controlled conditions, enabling quantitative evaluation of classification accuracy and error patterns.

The research framework consisted of six main stages: (1) problem identification, (2) system design, (3) electronic assembly, (4) Arduino programming, (5) system testing, and (6) performance evaluation. Each stage was designed iteratively to ensure functional integration between hardware, software, and experimental procedures.

The initial phase involved identifying critical issues related to waste management practices in school environments. Previous studies indicate that waste sorting at schools is predominantly conducted manually and relies heavily on students' awareness and supervision, resulting in inconsistent outcomes. Furthermore, technological waste sorting solutions are typically developed for industrial settings and lack pedagogical integration.

Based on these findings, the conceptual framework of this study proposed a multi-sensor - based waste classification system that combines visual and chemical indicators of waste. The rationale for integrating a color sensor and a gas sensor was to overcome limitations associated with single-sensor classification systems. Color-based classification alone may lead to misidentification due to visual similarities among different waste types, while gas-based detection provides complementary chemical cues, particularly for organic waste.

The framework positioned the Arduino Uno microcontroller as the central processing unit responsible for sensor data acquisition, signal processing, decision-making, and actuator control. Servo motors were employed to physically direct waste items into designated bins.

The hardware architecture was designed using a modular approach to facilitate ease of assembly, troubleshooting, and educational demonstration. The system consisted of the following primary components circuit diagram in figure 1

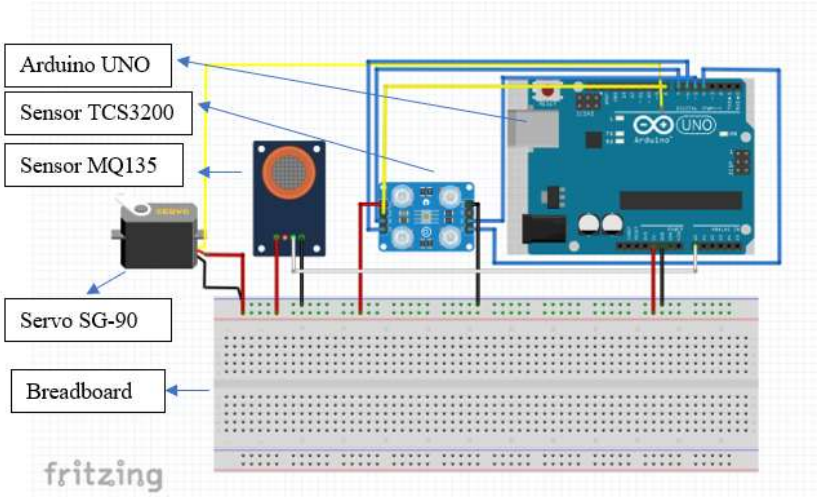

Figure 1. Circuit diagram.

The following is the function of the primary components circuit

- Arduino Uno microcontroller as the control unit
- TCS3200 color sensor for RGB color detection
- MQ-135 gas sensor for volatile gas detection

© 2024, Journal of Science Education
ISSN 3031-4518 (online)

- SG90 servo motor for mechanical actuation
- Breadboard and jumper wires for circuit assembly
- Dual-compartment waste bin for output classification

The sensors were positioned at a fixed distance of approximately 1 cm from the waste input area to ensure consistent signal acquisition. The servo motor was mechanically linked to a sorting gate mechanism that directed waste into either the organic or inorganic bin based on classification results shown in figure 2

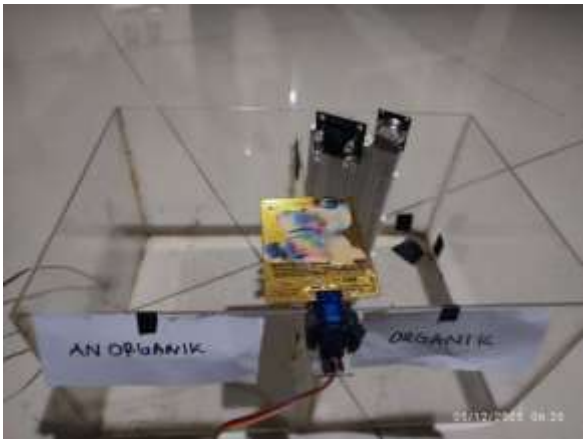

Figure 2. Automatic waste sorting tool

The software architecture was developed using the Arduino Integrated Development Environment (IDE) and programmed in C/C++. The program flow followed a sequential logic structure comprising sensor initialization, data acquisition, signal averaging, threshold comparison, decision logic, and servo actuation.

To enhance measurement stability, multiple sensor readings were acquired for each waste sample, and average values were computed to minimize random noise. Decision rules were implemented using conditional logic based on calibrated threshold values obtained during the sensor calibration phase.

A total of 40 waste samples were used in this study, consisting of:

- 20 organic waste samples (e.g., food residues, wet organic matter)
- 20 inorganic waste samples (e.g., plastic packaging, dry materials)

The sample size was selected to provide balanced representation between waste categories while maintaining experimental feasibility. Organic waste samples were selected to represent materials that typically generate detectable gaseous emissions, whereas inorganic samples were chosen to minimize gas interference.

All experiments were conducted in a closed indoor environment to control external variables. Environmental parameters were maintained within the following ranges:

- Temperature: 27–29 °C
- Relative humidity: 60–70%

These conditions were selected to reflect typical indoor school environments and to ensure sensor stability during data acquisition. Sensor calibration was conducted prior to experimental testing to establish reliable threshold values for classification. The TCS3200 sensor was calibrated in a closed room to minimize ambient light interference. For each waste sample, RGB intensity values were recorded through 10 repeated measurements, and the average value was computed.

© 2024, Journal of Science Education
ISSN 3031-4518 (online)

Threshold values for classification were determined using the median distribution of organic waste samples, resulting in the following thresholds:

- Red channel threshold (T_R): 230
- Green channel threshold (T_G): 210

These thresholds served as reference values for differentiating waste categories based on reflected color intensity.

The MQ-135 sensor calibration focused on detecting gaseous emissions from organic waste. Calibration involved continuous ADC readings over 120 seconds for 10 wet organic waste samples. Based on the distribution of readings, a gas threshold value was established:

- Gas threshold (T_Gas): 350

To reduce noise and short-term fluctuations, the final gas value used for classification was computed as the average of 10 consecutive readings:

$$Gas_{avg} = \frac{1}{10}\sum_{i=1}^{10} Gas_i \qquad (1)$$

Each waste sample was individually placed in the sensing area at a fixed distance of 1 cm from the sensors. The system sequentially acquired color and gas sensor data, processed the readings, and executed the classification decision. The following is a flow diagram of the experiment of sorting organic and inorganic waste.

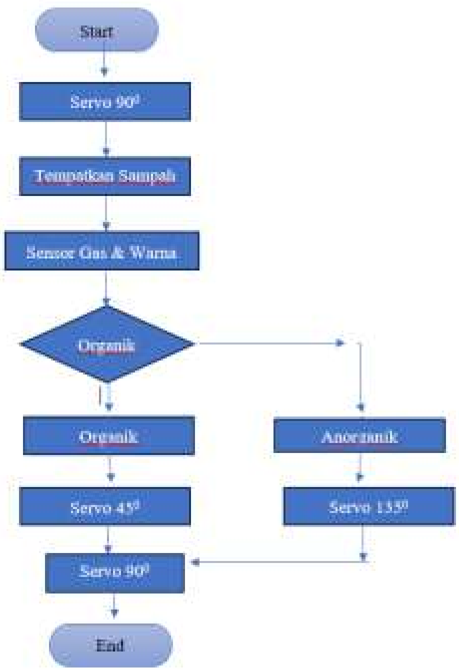

Figure 3. Experimental flow diagram

The servo motor was activated immediately after classification, directing the waste item into the corresponding bin. The classification outcome for each trial was recorded manually for subsequent analysis.

The primary performance metric used in this study was classification accuracy, calculated as:

$$Accuracy = \frac{\text{Number of correctly classified samples}}{\text{Total number of samples}} \times 100\% \qquad (2)$$

In addition to overall accuracy, a misclassification analysis was conducted to identify patterns of incorrect detection. Each misclassified sample was categorized based on waste type and

© 2024, Journal of Science Education

sensor response to determine potential sources of error, such as overlapping color values or insufficient gas emission.

Descriptive statistical analysis was employed to summarize sensor readings, classification outcomes, and error distributions. Although this study did not involve human subjects directly, ethical considerations were addressed by ensuring that waste handling procedures followed hygiene and safety standards. From an educational perspective, the system was designed to be safe, low-voltage, and suitable for demonstration in classroom or laboratory settings. To ensure that the developed waste sorting system functions consistently and reliably, system validation and reliability testing were conducted following the main experimental trials. Validation aimed to verify that the system's outputs accurately reflected the intended classification logic, while reliability testing focused on the stability of sensor readings and classification outcomes across repeated trials under identical conditions.

System validation was carried out by comparing the classification results generated by the system with manual ground-truth classification performed by the researcher. Each waste sample was visually and contextually identified prior to testing to establish its true category (organic or inorganic). The automated classification result was then matched against this reference classification. A classification was considered valid if the system output matched the predetermined category of the sample.

Reliability testing involved repeated measurements using the same waste samples under unchanged environmental conditions. Each sample was tested three times, and the consistency of classification outcomes across these repetitions was analyzed. A system was considered reliable if it produced identical classification results for at least two out of three trials per sample. This approach allowed the identification of unstable sensor responses or borderline threshold cases that could compromise system consistency.

Furthermore, temporal stability of sensor readings was assessed by observing sensor outputs at different times within the same testing session. This step was particularly important for the MQ-135 gas sensor, which is known to exhibit drift due to temperature changes and sensor heating effects. By evaluating the variance of sensor readings over time, the study assessed whaher additional stabilization or recalibration procedures were necessary.

Several constraints inherent to low-cost sensor systems were acknowledged and addressed through experimental control measures. First, environmental lighting was controlled by conducting experiments in a closed room to minimize external light interference affecting the TCS3200 sensor. Second, temperature and humidity were monitored to maintain stable conditions for MQ-135 operation. Third, sensor placement and sample positioning were standardized to ensure consistent data acquisition. The distance between the waste sample and the sensor module was fixed at 1 cm, and samples were placed in the same orientation during each trial. These control measures were essential to reduce variability and enhance result reproducibility.

Although the primary focus of this study was technological performance evaluation, the system was explicitly designed with educational applicability in mind. The simplicity of the hardware configuration, transparency of system logic, and visibility of sensor operation make the system suitable for use as a STEM learning tool in school settings. From a methodological perspective, the system enables students to engage in inquiry-based learning by observing how sensor data influence system decisions. Students can modify threshold values, test different waste samples, and analyze classification outcomes, thereby developing critical thinking and problem-solving skills. The educational dimension also influenced methodological choices, such as the use of Arduino Uno instead of more complex microcontrollers, and the avoidance of opaque machine-

© 2024, Journal of Science Education
ISSN 3031-4518 (online)

learning models. This ensured that system behavior remained interpretable and aligned with learning objectives.

Several potential threats to validity were identified and considered in this study. Internal validity threats included sensor drift and environmental fluctuations, which were mitigated through calibration, controlled testing conditions, and repeated measurements. External validity threats related to the limited variety and quantity of waste samples, which may restrict generalizability to broader waste categories.

Construct validity was addressed by ensuring that sensor outputs accurately represented the physical properties of interest, namely color characteristics and gas emissions. Finally, reliability threats were minimized through repeated trials and consistency checks. While these measures enhanced methodological rigor, future studies are encouraged to expand sample diversity, incorporate long-term testing, and evaluate system performance in real-world school environments.

In summary, this study employed a comprehensive experimental methodology to design, implement, and evaluate an Arduino-based multi-sensor waste sorting system. The methodology integrated systematic hardware and software development, rigorous calibration procedures, controlled experimental testing, and detailed performance analysis.

The methodological framework not only ensured reliable evaluation of system accuracy and robustness but also supported the study's broader objective of developing a practical, educationally relevant technological solution for school-based waste management. By combining engineering experimentation with contextual educational considerations, the methodology provides a replicable model for future research at the intersection of environmental technology and STEM education.

RESULT AND DISCUSSION

The performance of the developed Arduino-based waste sorting system was evaluated through a series of controlled experiments using 40 waste samples, consisting of 20 organic and 20 inorganic items. The evaluation focused on classification accuracy, reliability, error patterns, and the contribution of multi-sensor integration to overall system performance.

The Arduino-based automatic waste sorting prototype developed at SMPN 1 Plumbon works by combining a TCS3200 color sensor and an MQ-135 gas sensor. This system is based on the assumption that organic waste is darker in color and produces gas from decomposition, while inorganic waste is generally lighter in color and does not release gas.

Calibration was performed on 20 initial samples to determine threshold values. The results showed that organic waste, on average, had a red intensity (R) value below 230 and a green intensity (G) value below 210. Meanwhile, gas concentrations in organic waste showed ADC values above 350. Based on this data, a simple classification was used with the rule: waste is considered organic if the color value meets the threshold or the gas value exceeds the threshold. This approach uses the gas sensor as an additional correction for waste with ambiguous colors.

Overall, the system demonstrated the ability to classify waste items automatically and consistently under controlled environmental conditions. The integration of the TCS3200 color sensor and the MQ-135 gas sensor enabled the system to utilize both visual and chemical indicators, resulting in improved classification robustness compared to single-sensor approaches.

During experimental trials, the system responded promptly to sensor input and successfully actuated the servo motor to direct waste items into the appropriate bin. No mechanical failures were observed during testing, indicating that the hardware configuration was sufficiently stable for

© 2024, Journal of Science Education
ISSN 3031-4518 (online)

repeated operation. The following is a table showing the results of the experiment of sorting organic and inorganic waste.

Table 1. Comparison of Manual vs. Automatic Sorting Accuracy

No	Method	Total Sample	Correct	Wrong	Accuracy
1.	Manual	40	33	7	82,5%
2.	Otomatis	40	37	3	92,5%

System testing on 40 samples showed 37 correct classifications and 3 incorrect ones, for a total accuracy of 92.5%. This value is higher than the 82.5% achieved for manual sorting, indicating that the dual-sensor system provides a 10% accuracy improvement over conventional methods.

The results showed that the TCS3200 effectively recognized waste color to differentiate between light (inorganic) and dark (organic) groups. However, the color sensor experienced bias when objects were similarly colored, such as dry leaves and recycled paper. Misclassifications occurred in two dry organic samples and one dark plastic sample, indicating the limitations of the color indicator. This aligns with Lestari's (2022) findings that color-based accuracy alone is low for dull objects.

The use of MQ-135 corrected ambiguous cases because decomposing organic waste produces volatile gases with ADC values > 350. These findings support Rahmadani's (2021) research on the sensitivity of MQ-135 to NH_3 as an organic indicator. However, when organic waste is dry and has not yet decomposed, the gas sensor is unable to provide a signal differentiation, so it relies solely on the color sensor.`

Thus, the contribution of this research lies in the integration of two classification parameters in a simple Arduino device system, which demonstrated improved accuracy compared to a single approach. Unlike Putra's (2020) study, which relied solely on color, this study introduces a gas sensor correction scheme to address the weaknesses of visual identification. Furthermore, Zhang et al (2020) found that the integration of multiple sensors within a single system allows for more reliable decision-making than using a single sensor.The use of sensor technology and embedded systems has been widely applied in automated waste management and sorting. Sorting systems based on physical and chemical characteristics are considered capable of improving waste management efficiency from the source according to Singh & Sharma (2021).

From an educational perspective, the technical performance of the system directly supports inquiry-based learning activities. The accuracy and consistency of the tool allow students to confidently engage in data-driven investigations, such as comparing sensor readings, identifying threshold values, and analyzing why certain samples are misclassified. By examining real sensor data recorded in spreadsheets, students are encouraged to explore patterns, test hypotheses, and revise their assumptions, which are key components of scientific inquiry. Thus, system performance is not only a technical outcome but also a prerequisite for meaningful learning experiences in STEM contexts.. This aligns with the Research-Based Learning approach, where learning directly integrates science, technology, engineering, and mathematics (STEM). According to Sari & Widodo (2021), environmental project-based learning improves students' conceptual understanding and ecological awareness. This research demonstrates that simple Arduino-based technology can be applied in real-world settings to improve waste sorting in schools. With an accuracy of over 90%, this prototype is worthy of development as a learning tool and to support environmentally conscious school programs such as Adiwiyata.

© 2024, Journal of Science Education
ISSN 3031-4518 (online)

This research has several limitations. First, the threshold-based classification system assumes a clearly separated distribution of sensor values, whereas the characteristics of real-world waste are highly diverse. Second, the gas sensor is only effective on organic waste that has undergone active decomposition, resulting in less detection of dry organic waste. Third, the test was conducted under controlled lighting conditions, while real-world implementations in waste bins can encounter variations in light and humidity. Fourth, waste detection was performed individually for each object, whereas in real-world conditions, waste tends to be mixed together.

Overall, the results demonstrate that the developed waste sorting system functions effectively as both a technological prototype and a pedagogical tool. By linking system accuracy, error patterns, and multi-sensor integration to inquiry-based and project-based learning, this study highlights the dual contribution of the research to technology development and science education, particularly in fostering STEM learning and environmental awareness in school settings.

CONCLUSION

This study shows that the Arduino-based automatic waste sorting system using a TCS3200 color sensor and an MQ-135 gas sensor is technically effective in classifying organic and inorganic waste with reliable accuracy and response time. Beyond its technical performance, the system provides concrete educational benefits by engaging students in scientific inquiry processes, including sensor calibration, data collection, quantitative analysis, and evidence-based decision-making, which are core practices in STEM learning. The device can be directly integrated into classroom activities as a hands-on project to demonstrate the application of physics, chemistry, and engineering concepts in a real-world environmental context. Future research should extend this work by evaluating its effectiveness in improving students' scientific understanding, inquiry skills, and STEM competencies, thereby strengthening the dual contribution of this research as both a technological innovation and an instructional tool in science education.

THANK-YOU NOTE

Our gratitude goes to the Integrated Science lecturer, Mr. Novitrian, who consistently guided this research. We also extend our gratitude to our fellow science teachers at SMPN 1 Plumbon who accompanied us and provided input during this research.

REFERENCES

Endartiwi, S. S., Lestari, R., dan Ardianto, I. 2024. Pengelolaan sampah berbasis sekolah untuk membentuk budaya bersih pada peserta didik. Jurnal Pengabdian Sapangambei Manoktok Hitei 4(1): 12–18.

Fajri, M. 2021. Pengaruh kelembaban terhadap akurasi sensor MQ-135 pada lingkungan terbuka. Jurnal Teknik Lingkungan 8(4): 201–208.

Hetharua, Alberth & Sumarno, Sumarno & Gunawan, Indra & Hartama, Dedy & Kirana, Ika. 2021. Alat Penyortir Buah Tomat Berdasarkan Warna Berbasis Mikrokontroller Arduino. Jurnal Penelitian Inovatif. 1. 119-130. 10.54082/jupin.18.

Lestari, N. 2022. Sistem pemilah sampah berbasis sensor warna pada lingkungan sekolah. Jurnal Teknologi Pendidikan 7(1): 33–40.

Ni'amah, B., Suryana, E., dan Handayani, A. 2022. Strategi pemilahan sampah di sekolah dasar untuk meningkatkan kesadaran lingkungan siswa. Jurnal Pendidikan Indonesia 3(2): 20–29.

Putra, D. A. 2020. Rancang bangun alat pemilah sampah menggunakan sensor warna TCS3200 berbasis Arduino. Jurnal Teknologi Elektro Indonesia 12(2): 45–52.

© 2024, Journal of Science Education
ISSN 3031-4518 (online)

Rahmadani, S. 2021. Karakteristik sensor MQ-135 dalam pendeteksian gas hasil pembusukan sampah organik. Jurnal Instrumen dan Sensor 5(1): 11–19.

Sari, L., dan Widodo, H. 2021. Implementasi pembelajaran STEM melalui proyek rekayasa alat pemilah sampah sederhana. Jurnal Sains Terapan 9(3): 21–30.

Singh, R., & Sharma, R. 2021. Smart waste management using Internet of Things (IoT): A review. Journal of Cleaner Production, 289, 125–146.

Taufiq, Arif & Hayat, Latiful & Muchtasjar, Bunyamin & Iskahar, Iskahar & Romandolo, Davit & Amarudin, Rochmi. 2024. Sistem Monitoring Polusi Udara Berbasis Sensor MQ-135 Untuk Deteksi Gas CO2 dan CO: Studi Kasus di Lingkungan Perkotaan. Techno (Jurnal Fakultas Teknik, Universitas Muhammadiyah Purwokerto). 25. 131. 10.30595/techno.v25i2.24100.

Yusra, H., Pratiwi, D., dan Alam, S. 2023. Sosialisasi pemilahan sampah organik dan anorganik di SDN Banjarharjo. Jurnal Pengabdian UNJA 5(2): 45–52.

Zhang, Y., Wang, S., & Zhao, J. 2020. Automatic waste classification using sensor-based and embedded systems: A review. Waste Management, 102, 225–238.

© 2024, Journal of Science Education
ISSN 3031-4518 (online)